Zaor

Details
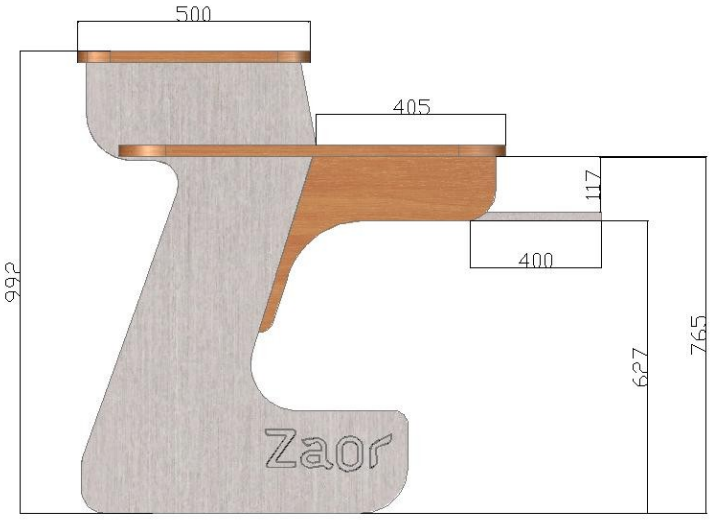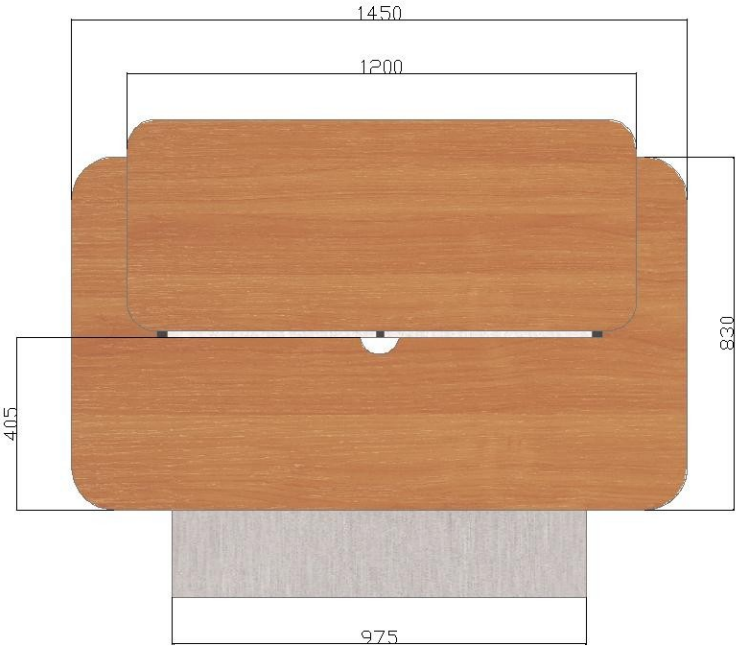
Cod. 20.011